Tumble dryers

T4530, T4650

Features and benefits

- High productivity - 2 full loads per hour
- Selection of temperature and time for easy operation
- Large door opening for easy loading and unloading
- Large selfcleaning lint screen for easy maintenance
- Easy access to vital parts from front and rear for simple servicing
- Selecta Microprocessor control
  - 2 auto stop programs for extra dry and dry
  - 5 to 9 taylor made programs for any drying need
  - Accurate temperature control for unmatched drying accuracy
  - Anti-crease cycle for avoiding creasing if the dryer is not unloaded
  - Error codes for easy trouble shooting
  - High contrast display
- Serviceprogram for adjustment of parameters eg. temperature and cooldown time

Main options

- Stainless steel front
- Stainless steel drum
- Residual Moisture Control - RMC
- Payment: coinmeter, chip card reader, CP connection, intelligent communication
- Reversing drum
- Heat recovery system: Heat Recovery Pipes (HRP)
- Special versions (dryer + option package): Lagoon™ variant includes stainless steel front, stainless steel drum, RMC and reversing drum
- CMIS
- Fresh air intake
- Emergency stop button
- Supply disconnector

Main specifications		T4530				T4650			
Rated capacity, filling factor 1:18	kg/lb	29.4/64				36.1/79			
filling factor 1:25	kg/lb	21.2/46				26/57			
Drum volume	litre	528				650			
Drum diameter	mm	913				913			
Heating alternatives									
electric	kW	24/30				30/36			
gas	BTU/h (kW)	136 500 (40)				194 600 (57)			
steam at 600-700 kPa	kW	46				46			
Consumption data*		24 kW	30 kW	Gas	Steam	30 kW	36 kW	Gas	Steam
Total time at 23/29.5 kg	min	36	31	22	28	36	30	22	31
Energy consumption at 23/29.5 kg	kWh	13.7	14.2	15	23	17.4	16.9	17.9	28.5
Evaporation	g/min	319	368	524	451	414	487	677	481
Energy kWh/litre water evaporated	kWh/l	1.2	1.24	1.32	1.84	1.17	1.16	1.2	1.91

* At rated capacity 100% cotton load at 50% initial moisture dryed to 0%.

Certified in accordance with ISO 9001 and ISO 14001 and approved IP 42.

Electrolux

Electrical connections				T4530	T4650
Heating Voltage					
El.	200-240V 3AC 50/60 Hz		kW(A)	26 (80)	32 (100)
			kW(A)	32 (100)	-
	400-440V 3NAC 50/60 Hz		kW(A)	26 (50)	32 (50)
			kW(A)	32 (50)	38 (63)
Gas	200-240V 3AC 50/60 Hz		Motor kW(A)	1.5 (10)	2 (15)
or	400-440V 3NAC 50/60 Hz		Motor kW(A)	1.5 (10)	2 (10)
steam	230V 1AC 50 Hz		Motor kW(A)	1.5 (10)	-
	208-240V 1AC 60 Hz		Motor kW(A)	1 (15)	2 (15)
	120V 1AC 60 Hz		Motor kW(A)	1 (15)	2 (20)
Steam, gas and air connections					
Steam			ISO 7/1-R	3/4”	3/4”
Steam pressure			kPa	100-1000	100-1000
Steam consumption			kg/h	80-86	80-86
Condensate			ISO 7/1-R	3/4”	3/4”
Gas	NG/PG		ISO 7/1-R	1/2”	3/4”
	TG			1”	–
Gas pressure	Natural gas		Pa	2000	2000
			mbar	20	20
	Propane		Pa	2800-5000	2800-5000
			mbar	28-50	28-50
Air outlet			mm	Ø 200	Ø 200
Evacuated air,	el		m^3/h	1060	1500
	steam			1380	1500
	gas			1160	1500
Pressure drop (el/steam/gas)			Max. Pa	200/200/60	340
Sound levels					
Airborne sound level			dB(A)	<70	<70
Heat emission					
% of installed power, max				15	15
Shipping data (el/steam/gas)					
			net, kg	300/340/300	340/345/325
			crated, kg	315/355/315	355/360/340
			boxed, kg	455	476
Shipping volume			crated, m^3	2.62	3.06
			boxed, m^3	2.93	3.68
Accessories					
Heat recovery pipes				HRP530	HRP530
Fresh air intake				x	x
Dimensions in mm					
A Width				960	960
B Depth				1180	1370
C Height				1995	1995
D				720	720
E				650	650
F				1725	1725
G				595	595
H				155	155
I				225	225
J				950	950
K				2120	2300
L				1510	1510
M				270	270
N				595	595
O				140	140
P				170	170
R				500	500
S				10	10

1 Control panel
2 Door opening ø 810
3 Electrical connection
4 Gas connection
5 Steam connection
6 Condensate connection
7 Exhaust connection

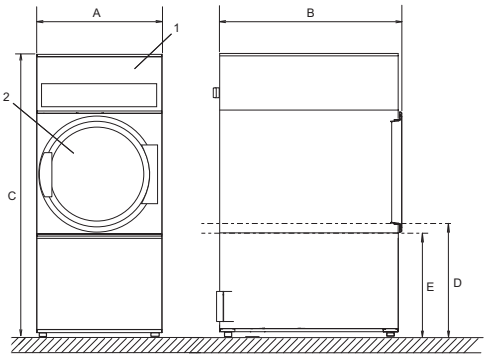

Front Left side

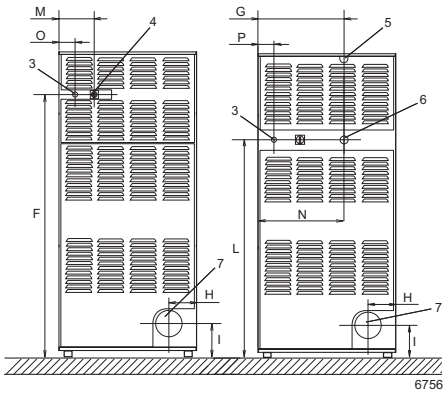

El, gas Steam

Rear side

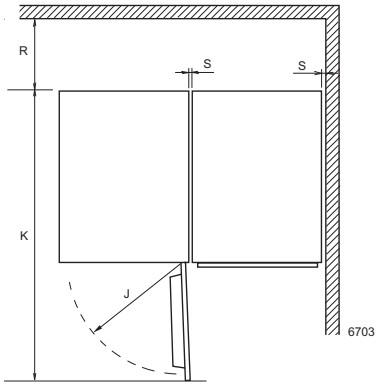

* Other voltages available, see installation manual.

Electrolux

www.electrolux.com/professional

Share more of our thinking at www.electrolux.com

Art. No. 438903201/03 07.48

We reserve the right to alter specifications without notice.